Talanta 83 (2011) 1665–1672

Contents lists available at ScienceDirect

Talanta

journal homepage: www.elsevier.com/locate/talanta

Column-switching linked to large sample volumes to preconcentrate β-blockers at trace levels in environmental water

M.D. Gil García, B. Peñas Pedrosa, M. Martínez Galera*

Department of Hydrogeology and Analytical Chemistry, University of Almeria, La Cañada de San Urbano, 04120 Almeria, Spain

ARTICLE INFO

Article history:
Received 11 June 2010
Received in revised form
15 November 2010
Accepted 22 November 2010
Available online 4 December 2010

Keywords:
β-Blockers
Environmental water
On-line SPE-LC–LC-DAD
Standard addition calibration

ABSTRACT

This paper describes about an automated on-line enrichment method for the simultaneous determination of seven β-blockers in river water using a short liquid chromatography column for preconcentration coupled with LC-DAD. The method performs the preconcentration of 30 mL of river water samples (5% organic modifier) using a 50 mm × 4.6 mm C18 column for enrichment and a 150 mm × 4.6 mm C18 column for separation, allowing the determination of β-blockers at trace levels in river water. The analytical procedure was developed by optimizing the breakthrough parameters (flow rate, time of preconcentration and percentage of organic modifier added to the sample) in order to achieve the maximum sensitivity, and by optimizing the mobile phase (composition and flow rate) to get adequate separation of the components in a reasonable analysis time. Under the optimized conditions, the method was validated with respect to linearity, precision, limits of detection, limits of quantification and accuracy. Detection and quantitation limits ranged between 0.1 and 3.1 and between 1.0 and 5.0 ng mL^{-1}, respectively, whereas the RSD on inter-day precision was below 8%.

To cope with the matrix effect in the determination of these drugs in river water samples, the standard addition methodology was successfully applied. Recoveries ranging from 81 to 115% proved the accuracy of the methodology proposed in this work.

© 2010 Elsevier B.V. All rights reserved.

1. Introduction

Aquatic pollution is particularly troublesome because aquatic organisms are captive to continual life-cycle, multigenerational exposure. The possibility for continual yet undetectable, or unnoticed, effects on aquatic organisms is of particular concern giving that these effects can accumulate so slowly that major change goes undetected until the cumulative level of these effects finally causes to irreversible changes that would otherwise be attributed to natural adaptation or ecological succession [1].

The occurrence of pharmaceuticals in the environment and the question of whether they pose a risk have received considerable attention over recent decades, with research activities focused on environmental fate, environmental effects and potential risk assessment.

β-Blockers, are pharmaceuticals extensively used for the treatment of cardiovascular disorders such as hypertension, arrhythmia and heart failure, and are among the most prescribed medications worldwide and the most frequently detected in the environment [2,3]. Most of these compounds are basic in nature and at neutral pH exist largely in their ionized form, in such a way that they are highly water soluble thus leading to enhanced availability in the environment.

These pharmaceuticals are of concern due to their acute and chronic toxicity towards aquatic organisms [4] at low concentration levels. Propanolol shows the highest acute toxicity and highest log K_{ow} (octanol–water partition coefficient) compared to other β-blockers, with a half maximal effective concentration EC50 (48 h) = 0.8 ng mL^{-1} for *Ceriodaphnia dúbia* and EC50 (48 h) = 1.6 ng mL^{-1} for *Daphnia magna*, whereas metoprolol, atenolol, betaxolol and sotalol display lower acute toxicity [4].

Several analytical methodologies are available in the literature for the determination of β-blockers. Most of them are focused on their determination in either biological samples [5–9] for anti-doping control or in environmental samples [2,10–21] given their negative ecotoxicological effects on several aquatic organisms. Generally, the method of choice consists of LC coupled to mass spectrometry (MS) [10–21], although coupling with UV [22,23] and fluorescence [22–24] detectors is also reported.

Due to the low concentration levels of these compounds in environmental waters, an analyte preconcentration step is nearly always necessary in order to attain the desired levels of analytical sensitivity, often requiring relatively large sample volumes (100–1000 mL). Most of the analytical methods for the determination of β-blockers in environmental water samples [10–13] use solid phase extraction (SPE) for preconcentration. In these meth-

* Corresponding author.
E-mail address: mmartine@ual.es (M. Martínez Galera).

0039-9140/$ – see front matter © 2010 Elsevier B.V. All rights reserved.
doi:10.1016/j.talanta.2010.11.046

ods, polymeric and reversed phase SPE materials, mainly Oasis® hydrophilic–lipophylic balanced (HLB) and C18, respectively, are the preferred phases for preconcentration and extraction purposes. Oasis HLB-SPE cartridges, with hydrophilic and lipophilic balance characteristics, provide the excellent wetting properties of the hydrophilic *N*-vinylpyrrolidine monomer, and can successfully extract polar organic compounds, whereas the hydrophobic based RP-C18 sorbents are effective for neutral compounds.

Although, SPE is the most versatile technique for analytes enrichment and for the removal of interfering species in complex samples, the large sample volumes required for off-line SPE make it particularly time-consuming. In addition, SPE could be considered prone to error, given the number of sample manipulations involved in this methodology. To reduce time and sample handling, there is considerable interest in developing on-line sample preparation procedures, thus overcoming the need for the time-consuming evaporation and reconstitution steps typically used in off-line sample preparation [25,26]. On-line preconcentration methods show other clear advantages compared to off-line SPE such as smaller sample volume requirements and better intra- and interday reproducibility, as well as an increase in the number of samples that can be analyzed [27].

Generally, on-line preconcentration techniques involve the use of an SPE cartridge [26,28,29], or a short column, coupled to the analytical column via a switching valve [27,30].

However, the development of SPE on-line methods presents several difficulties such as the purchase of specialized equipment, hardware modifications and staff training. In addition, the transfer of previous off-line methods to an on-line mode is not straightforward as incompatibility between SPE sorbents and analytical columns, mobile phase pH and peak broadening, among other problems, are often observed [27].

The compatibility of the mobile phase in reversed phase liquid chromatography with aqueous samples allows on-line sample enrichment with LC column-switching techniques. Two different approaches can be distinguished in coupled column LC for trace enrichment. The first approach, called pre-column switching liquid chromatography (PC-LC), consists of using a pre-column for sample enrichment of large sample volumes [31], whereas the second approach is the coupled column LC system (LC–LC), which employs two full size separation columns and large volume injections [30,32]. A drawback of PC-LC is that interferences are preconcentrated, along with analytes in the pre-column, whereas in LC–LC the elimination of substantial amounts of matrix interferences takes place in the first column. On the other hand, one advantage of PC-LC over to LC–LC is that very high sample volumes may be preconcentrated in the former, thus improving sensitivity. In the present work, we propose a new methodology (named on-line SPE-LC–LC) combining the advantages of both the PC-LC and LC–LC approaches, i.e. the preconcentration of large sample volumes (as offered by PC-LC) through a short analytical column, thus allowing the elimination of matrix interferences (as offered by LC–LC). This methodology, which was first applied by us for the determination of pesticides in river and ground waters [33,34], has been successfully applied for the determination of seven β-blockers (atenolol, pindolol, timolol, propanolol, nadolol, metoprolol and bisoprolol) in surface waters from a river receiving effluent from a small wastewater treatment plant, with results that compare favourably to SPE in terms of precision, recoveries and time consumption.

2. Experimental

2.1. Chemical and solvents

Analytical standards (pestanal quality) of atenolol (ATE), pindolol (PIN), timolol maleate salt (TIM), propanolol hydrochloride (PRO), nadolol (NAD), metoprolol tartate salt (MET) and bisoprolol (BIS) were purchased from Sigma–Aldrich (Germany). Fig. 1 shows the molecular structures and various properties of these seven β-blockers.

An aqueous stock solution of humic acids of Mr 600–1000 was prepared from Fluka Chemie AG (Buchs, Switzerland).

Acetonitrile (ACN) and methanol (MeOH) HPLC grade were obtained from J.T. Baker (Holland). Ortho phosphoric acid (H_3PO_4, 85%) and potassium dihydrogenphosphate (KH_2PO_4) analytical grade were purchased from Merck (Darmstadt, Germany) and sodium hydroxide (NaOH) was obtained from Panreac (Spain). Ultrapure water was obtained from a Milli-Q water purification system from Millipore (Bedford, MA, USA).

Mobile phase solvents were filtered through a 0.45 μm cellulose acetate (KH_2PO_4 0.025 M buffer adjusted to pH 3.5 with H_3PO_4) or polytetrafluoroethylene (PTFE) (MeOH and ACN), and degassed with helium prior to and during use.

2.2. Instrumentation

The on-line SPE-LC–LC system consisted of an isocratic Model 510 LC pump (P-1) and a gradient Model 600E LC multisolvent delivery pump (P-2), both from Waters (Milford, MA, USA), a Type 7000 high-pressure column-switching valve (HP) from Rheodyne (Berkeley, CA, USA) and a 2996 diode array detector (DAD) also from Waters, was used for the analytical determinations.

The enrichment and separation of β-blockers were performed with a Hypersil Elite C18 50 mm × 4.6 mm (5 μm particle size) first column (C-1) from ThermoQuest (Watham, MA, USA) and a second column (C-2) Gemini C18 150 mm × 4.6 mm (5 μm particle size) from Phenomenex (Torrance, California, USA), respectively. A Digital Venturis FP 575 Pentium personal computer using Millennium 32 (Chromatography Manager, Waters) software was used for the acquisition and treatment of data.

2.3. Preparation of standards and spiked samples

Individual analytical standard solutions of β-blockers (between 300.0 and 400.0 mg L^{-1}) were prepared by exactly weighing and dissolving the corresponding compounds in MeOH. Furthermore, the standard solutions were protected from light and stored at 4 °C in a refrigerator and were stable for at least 3 months.

Working standard solutions of the analytes were prepared daily in MeOH:water (20:80, v/v) and filtered through Millipore membrane PTFE filters (0.45 μm particle size) before injection into the chromatographic system.

For the optimization of the on-line SPE-LC–LC method, Milli-Q water samples were spiked with the β-blockers, the pH was adjusted to 3.5 and finally 5 mL of MeOH were added to 95 mL of each spiked and pH-modified water sample. Before pumping into the on-line SPE-LC–LC system, these modified water samples were filtered through a PTFE membrane (0.45 μm particle size).

For recovery determinations, river samples were spiked at concentration levels ranging from 2.0 to 13.0 ng mL^{-1}, simulating real waters which contain the target analytes. Five 95 mL aliquots of each spiked sample, adjusted to pH 3.5, were modified with 5 mL of MeOH and 0.0, 5.0, 7.0, 9.0 and 11.0 ng mL^{-1} of each analyte (standard addition levels) were added to each of them.

2.4. Procedure for on-line enrichment and analysis of β-blockers in surface water

The automated procedure was carried out using a HP valve to connect both C-1 and C-2 columns. The two HP valve positions (S-1 and S-2) were programmed through the LC data system to control the entire on-line SPE-LC–LC method. In the S-1 position, C-1 and

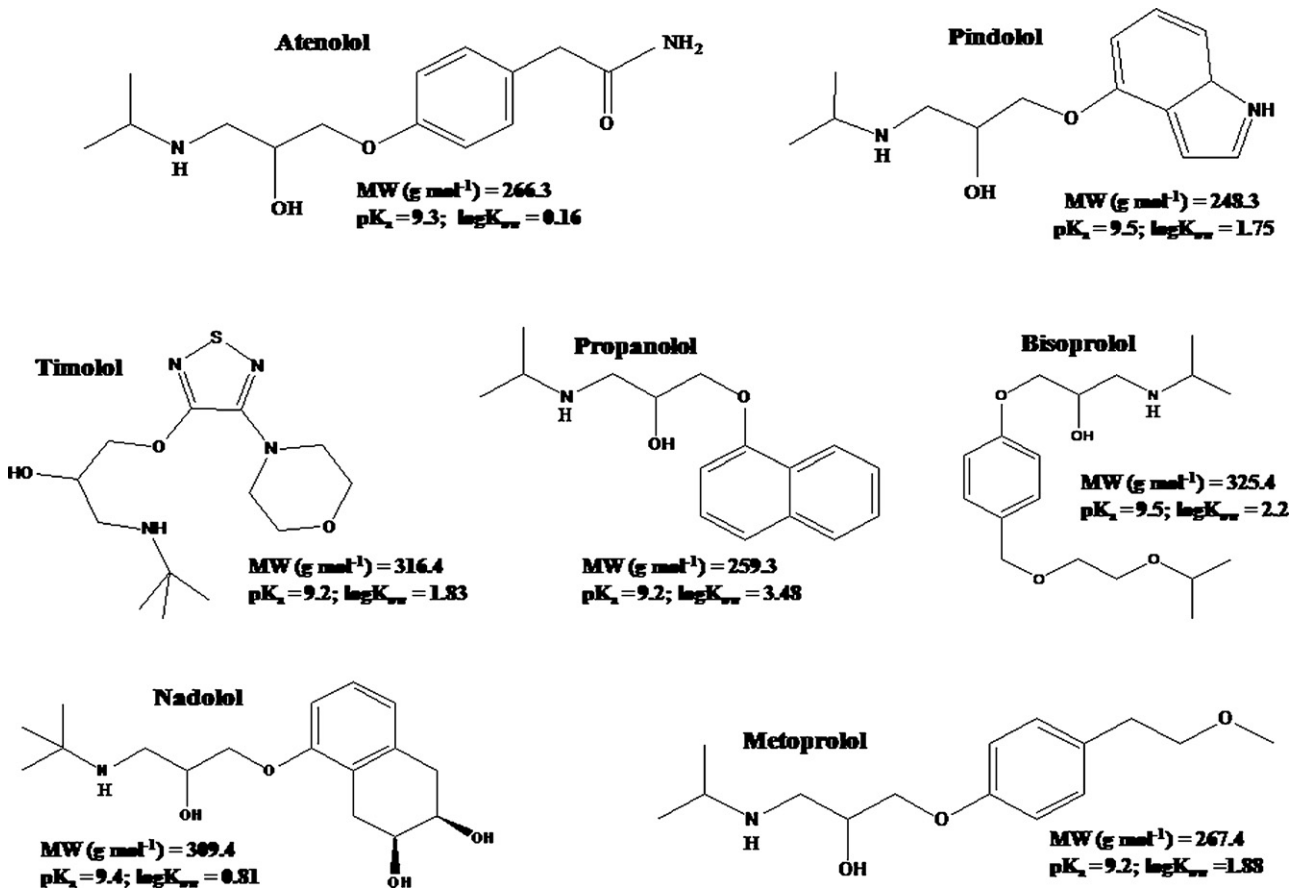

Fig. 1. Molecular structures and some physicochemical properties of the seven β-blockers.

C-2 are coupled in-line and the mobile phase from the P-2 pump passes through both columns. When the HP valve is switched to the S-2 position, the mobile phase from P-2 only passes through the C-2 column and the solvent or sample is pumped through C-1 using a P-1 pump. A schematic diagram for the two HP valve positions is shown in Fig. 2.

The on-line SPE-LC–LC methodology consists of four steps: column conditioning and sample load (step 1), pre-concentration of analytes and sample clean-up in C-1 (step 2), transfer of analytes from C-1 to C-2 (step 3) and finally, separation and analysis of analytes in C-2 while C-1 is being rinsed before the next analysis (step 4).

In step 1, the HP valve was in position S-1 and both columns (C-1 and C-2) were coupled on-line (Fig. 2a) for their conditioning with ACN:KH_2PO_4 0.025 M buffer (pH 3.5) (12:88, v/v) at a flow rate of 1.0 mL min^{-1} for 10 min, delivered by P-2. Simultaneously, the water sample (modified with 5% MeOH) was loaded into the LC system using P-1 at a flow rate of 1.5 mL min^{-1}. Next, the HP valve was switched to the S-2 position (step 2) and 30 mL of water sample, modified with 5% MeOH, was pumped by P-1 through C-1 at a flow rate of 1.5 mL min^{-1}. This was done to retain the analytes whereas the interferences, which were less retained, were eliminated to waste (Fig. 2b). Simultaneously, ACN:KH_2PO_4 0.025 M buffer (pH 3.5) (12:88, v/v) was pumped by P-2 through C-2 at a flow rate of 1.0 mL min^{-1}. After 20 min, the HP valve was returned to the S-1 position (step 3) to transfer the retained analytes from C-1 to C-2, where they were separated and detected in the DAD system (step 4) using the optimized LC gradient program described further on (Table 1). During the conventional LC analysis, after all the analytes were fully transferred to C-2 (the transference time was estimated to be 11 min) the HP valve was switched to the S-2 position and the water sample was changed to a mobile phase composed of ACN:water (90:10, v/v) at a flow rate of 1.5 mL min^{-1} to thoroughly wash C-1 before processing the next sample, thus avoiding analyte carry-over and retention of interferences.

The LC mobile phase consisted of a programmed gradient with KH_2PO_4 buffer solution (0.025 M at pH 3.5) as solvent A, ACN as solvent B and MeOH as solvent C for 26 min at a flow rate ranging from 1.0 to 1.5 mL min^{-1}. This was used for the transference of analytes from C-1 to C-2 and to separate them in the analytical column (C-2). Table 1 shows the mobile phase conditions, used with P-1 and P-2 pumps, including the load, enrichment, transference and separation steps. Under the above described chromatographic conditions, all the seven β-blockers were simultaneously analyzed in water samples by DAD using a wavelength range between 200 and 350 nm. The total time for the entire on-line SPE-LC–LC methodology was 56 min.

3. Results and discussion

3.1. LC optimization

In order to optimize the separation of the seven β-blockers, two LC columns (Symmetry C18 250 mm × 4.6 mm supplied by Waters and Gemini C18 150 mm × 4.6 mm supplied by Phenomenex) and several mobile phase compositions (H_2O, KH_2PO_4 buffer solutions at different pHs, and different percentages of ACN and MeOH) were tested.

Experiments carried out using different mobile phases showed that the chromatographic signals corresponding to the seven β-blockers were well resolved using the above mentioned two columns. However, the Gemini C18 column showed a better com-

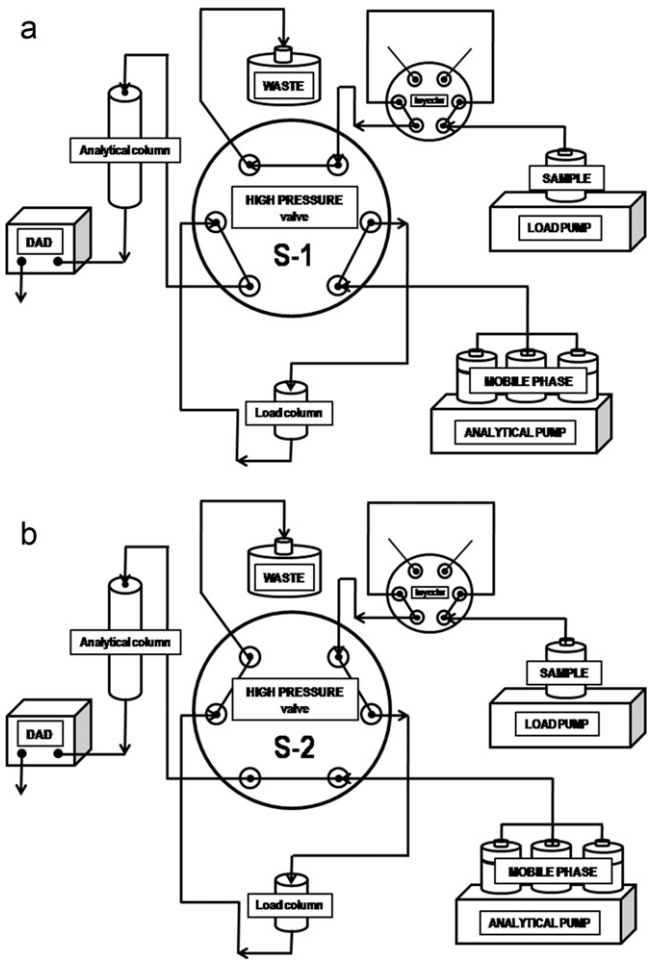

Fig. 2. Schematic diagram of the on-line SPE-LC–LC-DAD system used for the on-line preconcentration of β-blockers in river water. (a) HP valve in position S-1 and (b) HP valve in position S-2.

promise between separation and time of analysis and, therefore, it was chosen for further experiments.

β-Blockers are basic compounds, with pKa between 9.2 and 9.5, which at a neutral pH exist in their ionized form and, therefore, the pH of the mobile phase is a key factor in their LC separation [10].

To achieve the best chromatographic separation of the seven beta-blockers, different mixtures of organic (MeOH and ACN) and aqueous solvents (water and potassium dihydrogenphosphate 0.025 M) were tested as the mobile phase. It was found that the analytes were not retained on the chromatographic column when water was used in the mobile phase, a strong peak appearing at the beginning of the chromatogram. This is because at the pH values provided by the water:organic modifier mixture, the analytes are totally or partially ionized and, therefore, they are not retained by the stationary phase.

On the other hand, with the use of the dihydrogenophosphate ion in the aqueous phase, an improvement in the retention of the analytes was observed. Therefore, experiments were performed using KH_2PO_4 buffer (0.025 M) at different pH values (3.5, 4.5 and 5.5) as the aqueous component of the mobile phase as well as different percentages of MeOH or ACN. In this way, the analytes were retained and then efficiently eluted from the chromatographic column.

This behaviour may be explained by taking into account the chaotropic effect: different acids affect the retention of basic analytes in the low pH region because the counter anion of the acid interacts with the positively charged basic analyte and may form an ion-associated complex [35].

At acidic pH β-blockers are protonated on the secondary nitrogen group and acidic counter-anions in the mobile phase may cause the disruption of the primary and secondary solvation shell of these protonated species. Jones et al. [36] studied the effect of different counter-ions (tetrafluoroborate, perchlorate and dihidrogenophosphate) on the retention factor and the desolvation parameter (stability of the ion-associated complex) of six β-blockers. They found that the dihidrogenophophate anion, which is highly solvated due to its hydrogen-bonding capabilities, showed the lowest retention factor, but it formed the most stable ion-associated complexes. This behaviour, along with its capability to take part in buffer solutions, makes it an ideal counter-anion for chromatographic purposes. Through electrostatic interaction, the dihydrogenophosphate anion is attracted to the positively charged β-blockers and the ionic interaction displaces the surrounding water molecules as the two ions approach each other. As a result of this desolvation, the apparent hydrophobicity increases, therefore increasing the analyte affinity for the stationary phase.

On the other hand, in the experiments described above, it was found that peak areas decreased when the pH increased, mainly for the less polar β-blockers, and in addition, these analytes were slightly more retained in the analytical column. These small increases in the retention times of β-blockers were probably due to an increase in the concentration of the dihydrogenophospate ion as the pH of the buffer solution increased.

Table 1
LC programs used in P-1 and P-2 pumps for the load, enrichment, transference and separation of seven drugs in the PC-LC-DAD system.

Analysis step	HP valve	Time (min)	P-1 pump		P-2 pump			
			Flow rate (mL min^{-1})	Sample or washing solvent[a]	Flow rate (mL min^{-1})	Mobile phase composition (%)[b]		
						A	B	C
Load	S-1	0	1.5	Sample	1.0	88	12	0
Enrichment	S-2	10	1.5	Sample	1.0	88	12	0
		30	1.5	Sample	1.0	88	12	0
Transference and Separation	S-1	33	1.5	–	1.0	88	12	0
		34	1.5	–	1.5	88	12	0
		35	1.5	–	1.5	88	12	0
		42	1.5	–	1.5	65	15	20
Separation and washing	S-2	44	1.5	Washing solvent	1.5	60	20	20
		50	1.5	Washing solvent	1.5	88	12	0
		56	1.5	Washing solvent	1.0	88	12	0

–: stop flow.
[a] ACN:Milli Q water (90:10, v/v).
[b] A: 0.025 M KH_2PO_4 (pH = 3.5); B: ACN and C: MeOH.

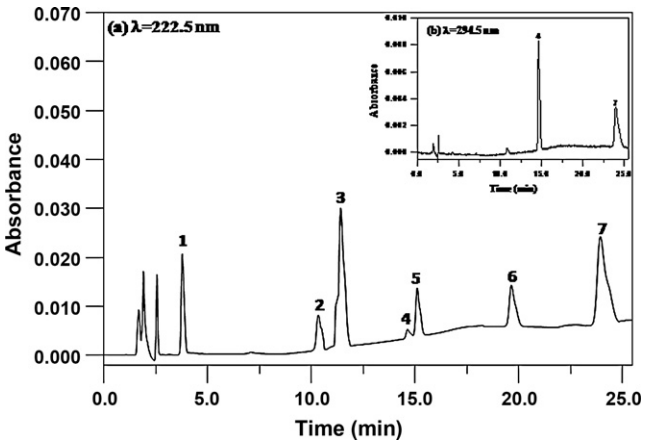

Fig. 3. LC chromatograms obtained for a standard mixture of seven β-blockers: (a) wavelength 222.5 nm and (b) wavelength 294.5 nm. (1) ATE, (2) NAD, (3) PIN, (4) TIM, (5) MET, (6) BIS and (7) PRO.

In the light of these considerations, the separation was carried using a KH_2PO_4 buffer solution (0.025 M at pH 3.5) to ensure complete protonation of all analytes and their adequate retention in the stationary phase. Finally, changes in the concentration of this buffer solution had a minimum influence on the analytical signals obtained for the analytes.

The best results were obtained using the mobile phase composed of KH_2PO_4 buffer solution (0.025 M at pH 3.5), ACN and MeOH described in Section 2; the last solvent was necessary for the complete resolution between TIM and MET (peaks numbers 4 and 5).

Chromatograms were selected at 222.5 nm for all β-blockers, except for TIM (peak number 4), which was monitored at 294.5 nm. Fig. 3 shows two chromatograms of the seven β-blockers in the LC optimized conditions at (a) 222.5 and (b) 294.5 nm.

3.2. On-line preconcentration

As in off-line SPE, the optimization of some parameters is essential in the development of an on-line procedure such as solid phase sorbent for retention, volume of sample to be pre-concentrated (depending on flow rate and breakthrough volume) and the elimination of matrix interferences.

In preliminary studies, two different stationary phases, a 5 μm Hypersil C18 column (50 mm × 4.6 mm id) and a restricted access medium (RAM) 5 μm Pinkerton GFF II column (50 mm × 4.6 mm id), were evaluated as the first column (C-1) to efficiently retain the β-blockers while the polar organic substances appearing in environmental waters were eliminated. These experiments were carried out using only the C-1 column directly connected to the DAD detector with Milli-Q water samples spiked with the β-blockers and/or humic acids passing thorough it, at a flow rate of 0.5 mL min^{-1}. All the analytes were strongly retained, while the organic matter was completely eluted, when using a Hypersil Elite C18 as the preconcentration column, whereas on the RAM column the β-blockers were less retained. For this reason the former was chosen as the enrichment column for the following experiments.

However, when the two columns were connected in-line using the HP valve, the β-blockers were not completely eluted to C-2 when using the mobile phase optimized in the previous section (LC optimization) to separate the analytes on C-2. Therefore, different amounts of MeOH were added to the water samples in order to improve their transference from C-1 to C-2, yet ensuring enough retention in the enrichment and clean-up step. It was found that the presence of an organic modifier increased the signal for all analytes, reaching a maximum with a percentage of 5% MeOH in the water sample. Higher percentages of this organic solvent did not improve the signals and, additionally, would lead to partial loss of the early eluting compounds during the enrichment step. Therefore, 5% of MeOH was added to water samples in all the following experiments.

To ensure the adequate retention of the more polar β-blockers, the pH of the water samples was optimised. Thus, Milli-Q water samples containing 5% of organic modifier and spiked with the seven β-blockers were adjusted to different pH values, ranging between 3.0 and 7.0 (the pH being adjusted with H_3PO_4 or NaOH), and then analyzed in the SPE-LC–LC system. The best results were obtained at low pH values because in the water samples they would promote the protonation of basic analytes, which are retained in the column through the chaotropic effect discussed above. From the results obtained it was decided to adjust the water sample to pH 3.5 with H_3PO_4 before preconcentration in C-1.

In order to obtain the highest sensitivity, to maximize recoveries and to eliminate as many matrix interferences as possible, several experiments were performed leading the optimal parameters for maximum performance of the system. Two essential parameters were optimized: the sample load flow rate and the enrichment time on C-1, which determine the maximum volume of water sample that can be preconcentrated in this column (i.e. the breakthrough volume).

To study the breakthrough volumes, increasing volumes of Milli-Q water (2.5, 5.0, and 7.5 mL), all of them containing 5% MeOH and 0.2 μg of each β-blocker, were passed through C-1 at different flow rates (0.5, 1.0, and 1.5 mL min^{-1}, respectively) for 5 min in all cases. This study was limited by the maximum pressure recommended for the column and it was not possible to use flow rates above to 1.5 mL min^{-1}. As no breakthrough was found in any case, 1.5 mL min^{-1} was selected as the flow rate for preconcentration of the water sample on C-1 for successive experiments. In addition, Milli-Q water samples (10, 20, 30, 40 and 50 mL), also containing 5% of MeOH and spiked with 0.2 μg of each analyte, were pumped at 1.5 mL min^{-1} for 5, 10, 15, 20 and 25 min, respectively. Breakthrough did not occur as the peak area remained invariable, but a considerable peak broadening was found when the enrichment time was 25 min. Consequently, a flow rate of 1.5 mL min^{-1} and a preconcentration time of 20 min were selected as the optimal enrichment parameters, corresponding to 30 mL of modified water sample containing 28.5 mL of water sample and 1.5 mL of MeOH.

3.3. Matrix removal in on-line SPE-LC–LC

One of the main drawbacks linked to on-line extraction techniques is the preconcentration of matrix components during the enrichment step. Thus, organic substances present in the environmental water samples may be preconcentrated along with analytes and cause interferences which make the quantification of the early-eluting analytes difficult. Current concentration levels of organic matter in surface water have been reported in the range between 0 and 10.0 mg L^{-1} [37], the greater proportion being expected in river water. To check the clean-up efficiency of the on-line SPE-LC–LC system, Milli-Q water samples spiked with 12.0 mg L^{-1} of humic substances were preconcentrated under the optimized conditions.

Fig. 4 shows the chromatograms corresponding to (a) a Milli-Q water sample spiked with humic acids (12 mg L^{-1}), using the C-1 column directly connected to the detector during the enrichment step and transfer with the LC mobile phase and (b) a Milli-Q water sample spiked with 10.0 ng mL^{-1} of β-blockers under the same conditions. It can be seen that the dual column setup allowed the interferences to be discarded during the enrichment step, while the selected drugs were strongly retained in C-1, thus providing enough selectivity in the early part of the chromatogram.

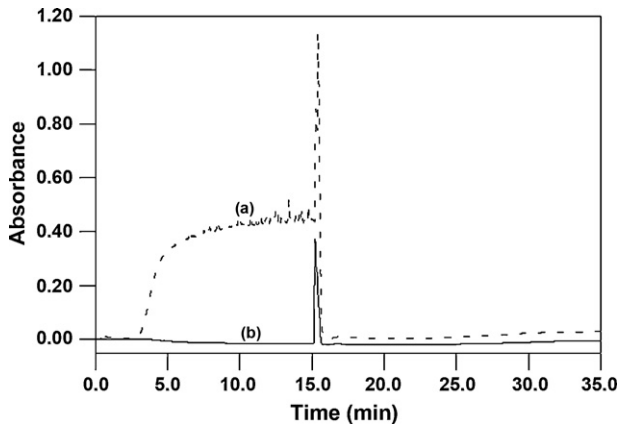

Fig. 4. Signal corresponding to (a) A Milli-Q water sample spiked with 12.0 mg L^{-1} of humic acids and (b) A Milli-Q water sample spiked with 10.0 ng mL^{-1} of β-blockers during the enrichment and transfer steps using (C-1).

Fig. 5 shows two on-line SPE-LC–LC chromatograms corresponding to (a) a river water sample and (b) the same river water sample spiked with 5.0 ng mL^{-1} of each β-blocker and having undergone the complete method. It can be seen that non-interferent peaks appear at the retention times of the analytes.

3.4. Carry-over

Carry-over is a common chromatographic problem that can compromise the precision and accuracy of an assay, reducing its reliability. The risk of carry-over in on-line sample treatment by LC–LC, using column-switching valves and complex lines is greater than in conventional LC [38]. The main cause of this problem is that in LC, the loop is flushed with an organic-rich mobile phase, whereas in LC–LC the first column is flushed with an organic poor phase in order to retain the analytes on top of the first column. Therefore, if carry-over is not prevented, washing of the sample loop or sample load devices and switching valves using the adequate solvents is necessary.

Carry-over was checked by analyzing a blank Milli-Q water sample following the analysis of a surface water sample containing β-blockers. The chromatogram obtained in this study showed evidence of carry-over for matrix components but no peaks for the target analytes were detected, which indicated that all the analytes were completely desorbed during the transfer step. However, the large matrix peaks found, probably corresponding to organic matter contained in surface water, evidenced the need of an additional washing step on the C-1 column before analyzing the next sample.

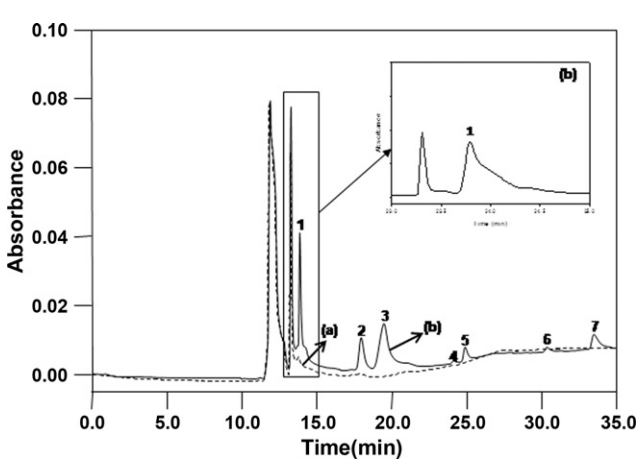

Fig. 5. SPE-LC–LC–DAD chromatogram corresponding to (a) a river water sample and (b) the same river water sample spiked with 5.0 ng mL^{-1} of β-blockers. (1) ATE, (2) NAD, (3) PIN, (4) TIM, (5) MET, (6) BIS and (7) PRO.

To remove the residual contamination from C-1, several binary aqueous:organic solvents were investigated. The best results were found when, after preconcentration of the sample and during the separation step, C-1 was flushed with ACN:water (90:10, v/v) for 10 min.

3.5. Matrix effect evaluation

Evaluation of the matrix effect on the response of analytes was performed by comparing the slopes of calibration graphs obtained from standard solutions in Milli-Q water and in three different river water samples (obtained at three different points along the course of the river) by means of a *t*-test [39]. The results showed significant differences between the slopes of the calibration curves, which had been constructed with standards prepared in Milli-Q water and in river waters and, in addition, significant differences were also found between the calibration curve slopes constructed with standards prepared in river water sampled at three different points along the course of the Nacimiento River (Almería, Spain), for all the β-blockers. The last finding demonstrates that matrix components in river water can be rather variable in both nature and amount along the course of a river and that it was not possible to use a blank water sample to build matrix-matched calibration graphs for quantitation when analyzing β-blockers in river water samples. Therefore, the standard addition calibration method was applied for the determination of the analytes in real samples.

3.6. Method optimization

Due to the presence of the matrix effect, analytical figures of merit were calculated using standards prepared in real water blanks. The performance of the on-line SPE-LC–LC-DAD method was evaluated with respect to sensitivity, accuracy and precision using real river water sampled from the lower part of the Nacimiento River in Almería (Spain), under less favourable conditions, i.e. where the matrix background would be higher.

Method detection limits (MDLs) for the overall on-line SPE-LC–LC-DAD method were calculated as proposed by the U.S. EPA [40] in such a way that this parameter takes into account not only the matrix effect, but also the variability introduced by all the sample processing steps.

The MDL corresponding to each β-blocker was initially estimated using seven replicated river water samples spiked at concentration levels between 0.5 ng mL^{-1} and 5.0 ng mL^{-1}, depending on the compound. In this way, each replicate was processed through the entire analytical method and an initial estimate of the MDL was then calculated by multiplying the standard deviation of the results by the appropriate *t* statistic.

$$\mathrm{MDL} = t_{(n-1,\alpha=0.01)} \times S_A$$

where n is the number of replicated analyses, S_A is the standard deviation of the replicate analyses, and t is the Student's t value for $n-1$ degrees of freedom at a 99% confidence level.

Once the initial estimated MDLs were calculated, a new set of seven aliquots of river water samples, spiked at concentration levels ranging between 0.7 and 10.0 ng mL^{-1} (depending on the compound), were analyzed through the entire method and S_B was also calculated for each pharmaceutical. Afterwards to verify that S_A and S_B were not statistically different (based on the F statistic of their ratio), these two variances were pooled to obtain a single

Table 2
Analytical figures of merit for the determination of β-blockers in river water using PC-LC-DAD.

Analyte	Linear range (ng mL^{-1})	r^2	Repeatability RSD (%)[a]		MDLs (ng mL^{-1})	LOQs (ng mL^{-1})
			Intraday-precision	Interday-precision		
ATE	5.0–30.0	0.9905	5.3	7.2	2.7	5.0
NAD	5.0–30.0	0.9813	0.7	8.0	3.1	5.0
PIN	5.0–30.0	0.9894	6.4	7.9	1.5	5.0
TIM[b]	2.0–30.0	0.9993	0.8	2.2	0.1	2.0
MET	2.0–30.0	0.9918	2.1	5.5	0.2	2.0
BIS	1.0–30.0	0.9945	0.9	3.4	0.1	1.0
PRO	1.0–30.0	0.9863	1.3	3.1	0.1	1.0

[a] LOQ concentration levels ($n = 6$).
[b] $\lambda = 294.5$ nm.

Table 3
Nominal and predicted concentrations (ng mL^{-1})[a] obtained for the β-blockers in river water using standard addition calibration.

Sample	ATE		NAD		PIN		TIM[b]		MET		BIS		PRO	
	Added	Found	Added	Found	Added	Found	Added	Found	Added	Found	Added	Found	Added	Found
1a	7.0	6.1 (86.6)	7.0	6.0 (85.5)	7.0	6.3 (89.5)	5.0	5.8 (115.1)	5.0	5.4 (108.6)	2.0	2.2 (107.9)	2.0	2.3 (114.0)
1b	11.0	9.5 (86.1)	11.0	9.0 (81.6)	11.0	10.5 (95.9)	7.5	8.1 (108.0)	7.5	7.7 (102.8)	5.0	5.2 (103.9)	5.0	5.4 (107.7)
2a	13.0	10.9 (83.8)	13.0	11.0 (84.6)	13.0	12.1 (93.4)	11.0	12.5 (113.9)	11.0	10.5 (95.3)	7.5	7.2 (95.7)	7.5	6.9 (92.1)
2b	5.0	4.8 (96.0)	5.0	4.9 (97.0)	5.0	5.0 (100.0)	3.0	3.3 (109.0)	3.0	2.8 (94.1)	6.0	6.4 (106.1)	6.0	6.1 (102.3)
3a	7.5	6.9 (91.4)	7.5	6.8 (90.9)	7.5	7.1 (94.7)	10.0	10.6 (106.0)	10.0	10.3 (102.6)	3.0	3.2 (105.6)	3.0	3.3 (109.0)
3b	10.0	8.8 (87.5)	10.0	9.5 (95.4)	10.0	8.9 (89.0)	5.0	5.2 (103.2)	5.0	5.3 (106.3)	10.0	10.0 (100.3)	10.0	9.8 (97.5)

[a] Recovery (%) in parentheses.
[b] $\lambda = 294.5$ nm.

estimated S^2_{pooled} as follows:

$$S^2_{\text{pooled}} = \frac{(n_A - 1)s_A^2 + (n_B - 1)s_B^2}{n_A + n_B - 2}$$

where n_A and n_B are the number of samples analyzed in each set.

The MDLs were then calculated using the pooled standard deviation as:

$$\text{MDL} = t_{(nA+nB-2,\alpha=0.01)} \times S_{\text{pooled}}$$

The values of MDL obtained in this way for the target analytes ranged between 0.1 and 3.1 ng mL^{-1}. These are summarized in Table 2.

Quantitation limits (LOQs) were calculated, according to the EURACHEM Guidance [41] as the lowest concentration of the analyte for which the relative standard deviation (RSD) of the signal is equal to a fixed percentage. River water samples fortified with increasing concentrations of the analytes ($n = 3$ for each concentration level) were processed through the entire analytical method and the LOQs for each analyte were those concentrations giving an RSD value equal to 10%. The results obtained, ranged from 1.0 to 5.0 ng mL^{-1}. These are summarized in Table 2.

Linear range was established for each pharmaceutical, the lower limit being the LOQ calculated according to the above criterion and the upper limit, the concentration for which the signal deviates from the linearity by 3–5% [42]. Calibration curves were obtained with eight standards prepared in river water covering the whole linear range (each point in triplicate) and processed through the entire analytical method. They showed good linear relationship ($r^2 > 0.98$) between 1.0 and 30.0 ng mL^{-1} for each analyte (Table 2).

Method precision was evaluated during the same day (intraday) and over a 4-week period (interday) using six river water samples spiked at the LOQ concentration levels for each analyte. Table 2 shows the results obtained, where it can be observed that the RSD was lower than or equal to 8.0%.

Comparing the above validation results with those reported by other authors, it was found that the on-line SPE-LC–LC-DAD method provides intra-day precision values (between 0.7 and 6.4%) similar or better than most reported for off-line SPE methods using commercially available cartridges [11–13], probably due to the avoidance of intermediate steps in manual SPE applications. In addition, the values for inter-day precision are not different from the repeatability values, which indicate that external factors did not influence the precision of the results.

3.7. Recovery studies

In order to establish the accuracy of the on-line SPE-LC–LC-DAD methodology for the quantitation of the seven drugs in real river water samples, the Nacimiento River (Almería, Spain) was sampled at three different points along its course and the samples were analyzed by the proposed method.

For the recovery studies, two aliquots of each of the three abovementioned test samples were spiked at two different concentration levels with the selected drugs (Table 3) and then, 0.0, 5.0, 7.0, 9.0 and 11.0 ng mL^{-1} of each pharmaceutical were added to five new aliquots of each test sample. Finally, each aliquot was analyzed using the proposed on-line SPE-LC–LC-DAD method and the results obtained were used for the determination of the drugs using standard addition calibration (Table 3). Recoveries in river water samples were found to be between 81% and 115% for all analytes, which shows that the on-line SPE-LC–LC system is able to quantitatively extract these β-blockers from this environmental matrix. This is in compliance with recoveries found in the literature using SPE methodology [12,13].

4. Conclusions

A simple, efficient, selective and low cost methodology for the determination of seven β-blockers in river water by LC-DAD including on-line preconcentration of these drugs in a C18 column, was developed.

Experiments with Milli-Q water spiked with the pharmaceuticals and/or humic acids demonstrated that the column switching performed a suitable clean-up, allowing polar interferences to be discarded, whereas the preconcentration of large sample volumes achieved enough sensitivity to determine these pharmaceuticals at the concentrations levels expected in environmental waters. Fur-

thermore, the clean-up and preconcentration steps were partially automated, which means a significant reduction in human error and contamination, as well as allowing the use of minimum volumes of organic solvent. All these advantages are in compliance with trends in sample treatment. On the other hand, the standard addition method successfully coped with the matrix effect, which was found to be variable along the course of the river, and allowed the determination of seven β-blockers in real waters with satisfactory results.

Acknowledgement

The authors are grateful to MINISTERIO DE CIENCIA Y TECNOLOGÍA (Proyecto CTQ2007-65954) for their financial support.

References

[1] C.G. Daughton, T.A. Ternes, Environ. Health Perspect. 107 (S6) (1999) 907–938.
[2] M. Gros, T.M. Pizzolato, M. Petrovic, M.J. López de Alda, D. Barceló, J. Chromatogr. A 1189 (2008) 374–384.
[3] T. Ternes, Water Res. 32 (1998) 3245–3260.
[4] K. Fent, A.A. Weston, D. Caminada, Aquat. Toxicol. 76 (2006) 122–159.
[5] W. Liu, L. Zhang, z. Wei, S. Chen, G. Chen, J. Chromatogr. A 1216 (2009) 5340–5346.
[6] R.D. Johnson, R.J. Lewis, Forensic Sci. Int. 156 (2006) 106–117.
[7] M. Thevis, W. Schanzer, J. Chromatogr. Sci. 43 (2005) 22–31.
[8] M. Thevis, G. Opfermann, W. Schanzer, Biomed. Chromatogr. 15 (2001) 393–402.
[9] M.Y. Liu, D. Zhang, Y.T. Sun, Y.W. Wang, Z.Y. Liu, J.K. Gu, Biomed. Chromatogr. 21 (2007) 508–513.
[10] M.D. Hernando, M.J. Gómez, A. Agüera, A.R. Fernández-Alba, TrAC Trends Anal. Chem. 26 (2007) 581–594.
[11] B. Kasprzyk-Hordern, R.M. Dinsdale, A.J. Guwy, J. Chromatogr. A 1161 (2007) 132–145.
[12] M. Farré, M. Gros, B. Hernández, M. Petrovic, P. Hancock, D. Barceló, Rapid Commun. Mass Spectrosc. 22 (2008) 41–51.
[13] N.M. Vieno, T. Tuhkanen, L. Kronberg, J. Chromatogr. A 1134 (2006) 101–111.
[14] S. Castiglioni, R. Bagnati, D. Calamari, R. Fanelli, E. Zuccato, J. Chromatogr. A 1092 (2005) 206–215.
[15] M.J. Gómez, M. Petrovic, A.R. Fernández-Alba, D. Barceló, J. Chromatogr. A 1114 (2006) 224–233.
[16] D. Bendz, N.A. Paxĭeus, T.R. Ginn, F.J. Loge, J. Hazard. Mater. 122 (2005) 195–204.
[17] M.D. Hernando, M. Petrovic, A.R. Fernández-Alba, D. Barceló, J. Chromatogr. A 1046 (2004) 133–140.
[18] H.H. Maurer, O. Tenberken, C. Kratzsch, A.A. Weber, F.T. Peters, J. Chromatogr. A 1058 (2004) 169–181.
[19] H.B. Lee, K. Sarafin, T.E. Peart, J. Chromatogr. A 1148 (2007) 156–167.
[20] L.N. Nikolai, E.L. McClure, S.L. MacLeod, C.S. Wong, J. Chromatogr. A 1131 (2006) 103–109.
[21] M.J. Gómez, M.J. Martínez Bueno, S. Lacorte, A.R. Fernández-Alba, A. Agüera, Chemosphere 66 (2007) 993–1002.
[22] V.P. Ranta, E. Toropainen, A. Talvitie, S. Auriola, A. Urtti, J. Chromatogr. B 772 (2002) 81–87.
[23] M. Delamoye, C. Duverneuil, F. Paraire, P. Mazancourt, J.C. Alvarez, Forensic Sci. Int. 141 (2004) 23–31.
[24] B. Dulger, N.E. Basci, I. Sagdic-Yalvac, A. Temizer, J. Chromatogr. B 772 (2002) 179–183.
[25] J.M. Marín, J.V. Sancho, O.J. Pozo, F.J. López, F. Hernández, J. Chromatogr. A 1133 (2006) 204–214.
[26] A. Piram, A. Salvador, J.Y. Gauvrit, P. Lanteri, R. Faure, Talanta 74 (2008) 1463–1475.
[27] P.A. Segura, C. Gagnon, A. Sauvé, Anal. Chim. Acta 604 (2007) 147–157.
[28] O.J. Pozo, C. Guerrero, J.V. Sancho, M. Ibáñez, E. Pitarch, E. Hogendoorn, F. Hernández, J. Chromatogr. A 1103 (2006) 83–93.
[29] K.J. Choi, S.G. Kim, C.W. Kim, S.H. Kim, Chemosphere 66 (2007) 977–984.
[30] L. Viglino, K. Aboulfadl, M. Prévost, S. Sauvé, Talanta 76 (2008) 1088–1096.
[31] J. Bones, K. Thomas, P.N. Nesterenko, B. Paull, Talanta 70 (2006) 1117–1128.
[32] E. Dijkman, D. Mooibroek, R. Hoogerbrugge, E. Hogeendoorn, J.V. Sancho, O. Pozo, F. Hernández, J. Chromatogr. A 926 (2001) 113–125.
[33] M. Martínez Galera, D. Barranco Martínez, P. Parrilla Vázquez, M.D. Gil García, J. Sep. Sci. 28 (2005) 2259–2267.
[34] M.D. Gil García, M. Martínez Galera, D. Barranco Martínez, J. Gisbert Gallego, J. Chromatogr. A 1103 (2006) 271–277.
[35] R. LoBrutto, A. Jones, Y.V. Kazakevich, H.M. McNair, J. Chromatogr. A 913 (2001) 173–187.
[36] A. Jones, R. LoBrutto, Y. Kazakevich, J. Chromatogr. A 964 (2002) 179–187.
[37] G.R. Aiken, D.M. Mcknight, R.L. Wershaw, P. MacCarthy, Humic Substances in Soil, Sediments and Water, Wiley, New York, 1985.
[38] Y. Asakawa, Ch. Ozawa, K. Osada, S. Kanebo, N. Asakawa, J. Pharm. Biomed. Anal. 43 (2007) 683–690.
[39] D.L. Massart, B.G.M. Vandeginste, L.M.C. Buydens, S. De Jong, P.J. Lewi, J. Smeyers-Verbeke, Handbook of Chemometrics and Qualimetrics Part A, Elsevier, Amsterdam, 1997, pp. 190, 209, 436.
[40] P.M. Bertovex, L.C. Brown, Definition and Procedure for the Determination of the Method Detection Limit, Appendix B to Part 136, Title 40, Revision 1.11. Statistics for Environmental Engineers, Lewis Publishers, 1994.
[41] EURACHEM Guidance Document No. 1/WELAC Guidance Document No. WGD 2, Accreditation for Chemical Laboratories, Guidance on the interpretation of the EN 45000 series of Standard and ISO/IEC Guide 25, Available from the EURACHEM Secretariat, P.O. Box 46, Teddington, Middlesex TW11 ONH, UK, 1993.
[42] D.L. Massart, B.G.M. Vandeginste, S.N. Deming, Y. Michotte, L. Kaufman, Chemometrics: A Textbook Part 2, Elsevier, Amsterdam, 1998.